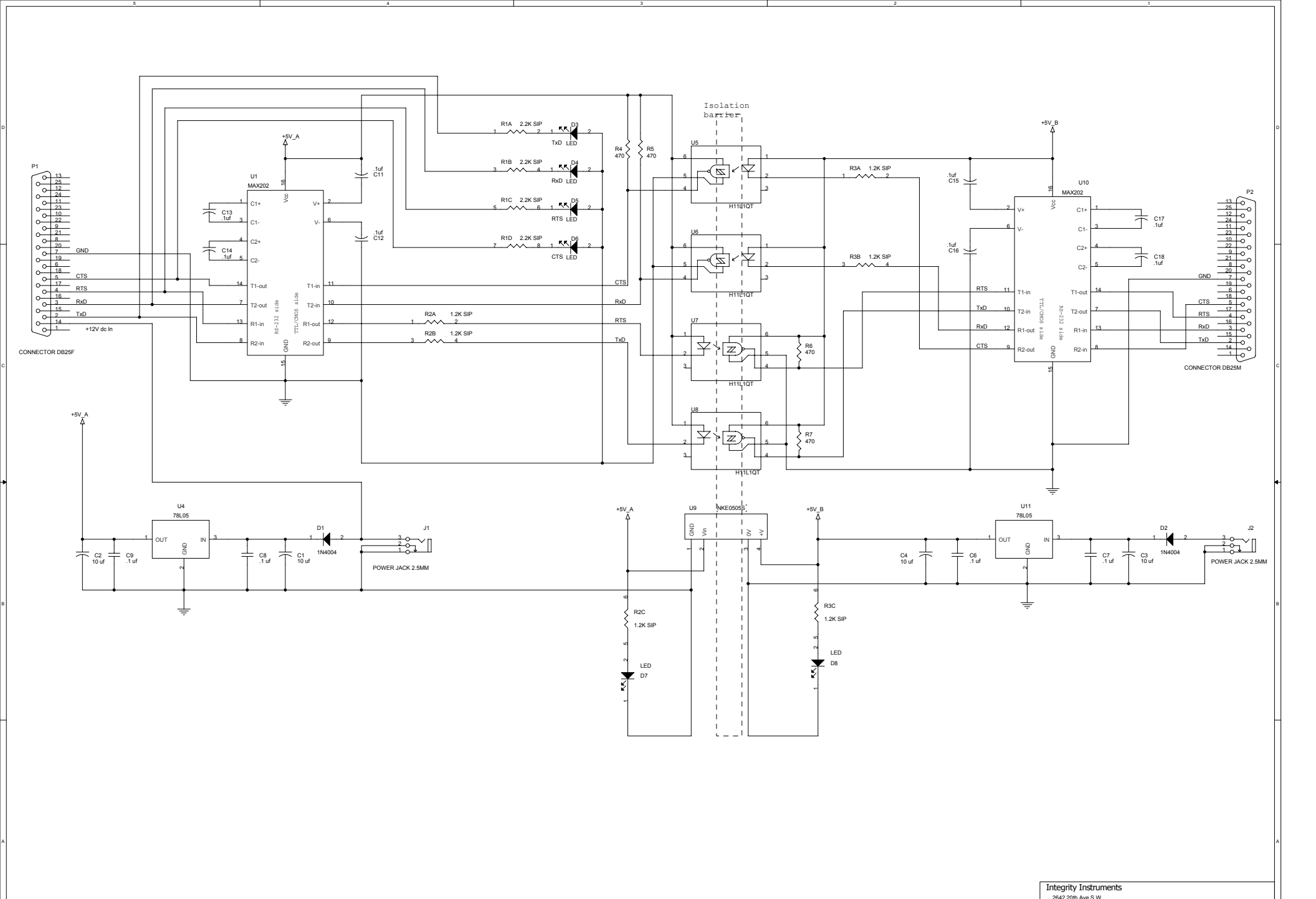

Integrity Instruments
2642 20th Ave S.W.
Pine River, MN 56474
www.intigrityusa.com

Title: 232-OPT VER 3 Schematic

Size	Document Number	Rev
C	<Doc>	<RevCode>

Date: Thursday, April 17, 2003 Sheet 1 of 1