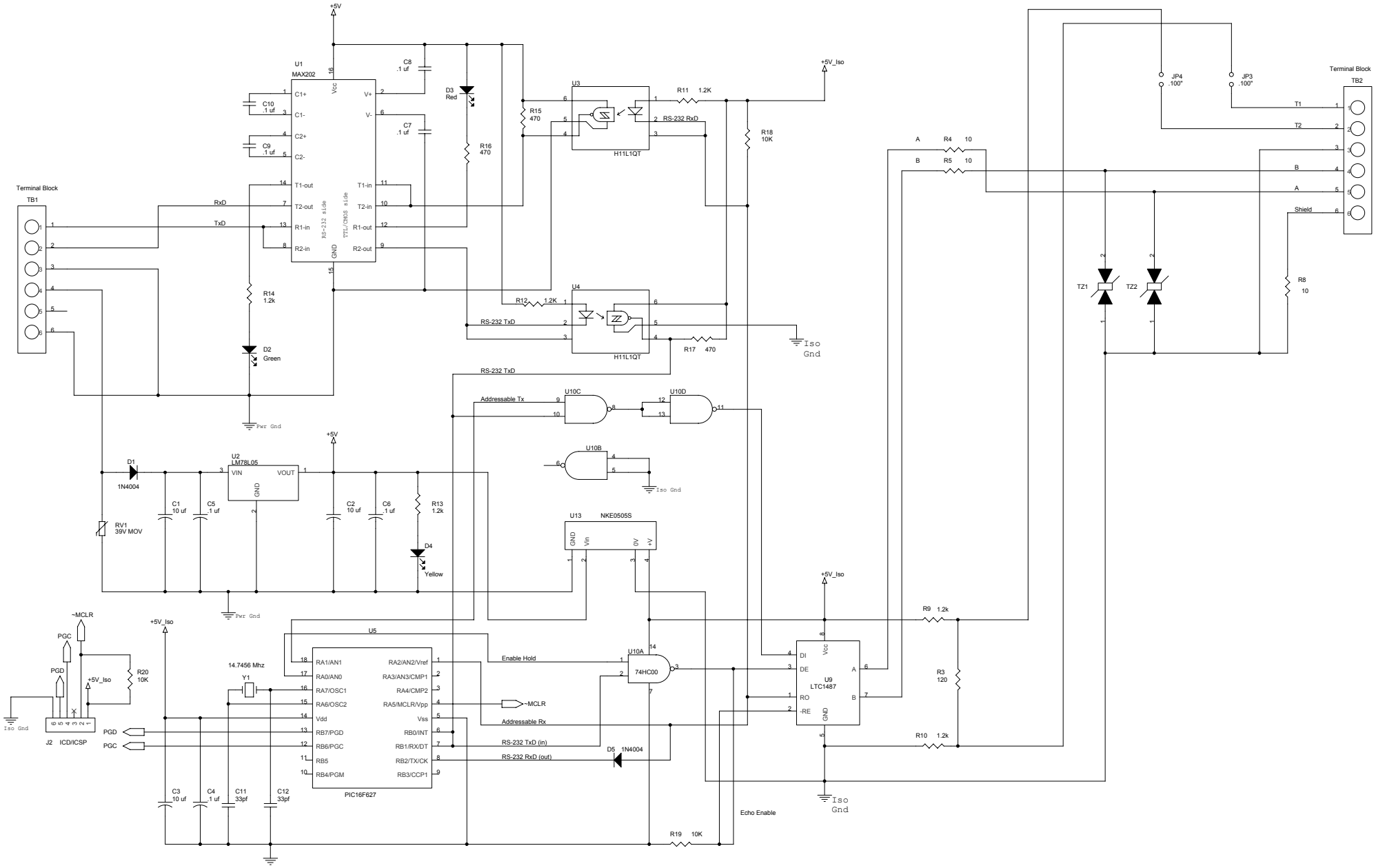

Integrity Instruments
2642 20th Ave S.W.
Pine River, MN 56474
www.intigrityusa.com

Title	XP485-DEI Schematic	
Size C	Document Number <Doc>	Rev <RevCode>
Date: Thursday, April 01, 2004	Sheet 1 of 1	